INPUT AMPLIFIERS | MS / XY | SOURCE SELECTOR | L X R | P. FILTER

STEREO MIC. AMPLIFIER
1.942.292

MIC. INP. L/M — P6-14 (a) 150, P6-16 151, P6-15 (b) 152
MIC. INP. R/S — P6-11 (a) 153, P6-13 154, P6-12 (b) 155
LINE INP LEFT — P6-4 (a), P6-6, P6-5 (b)
LINE INP RIGHT — P6-1 (a), P6-3, P6-2 (b)
GEN. — P4-13 (b), P4-12 (a)

IC 401.1 5534 · IC 401.2 5534 · IC 402 5534 · IC 403.1 5532 · IC 403.2 5532 · IC 301.1 5532 · IC 301.2 5532 · IC 302 5534 · IC 303.1 5532 · IC 303.2 5532 · IC 404 5534 · IC 304 5534 · TL 071 IC 501

T 401 1:1 · T 301 1:1

Q 401 Q 402 Q 403 Q 301 Q 302 Q 303 Q 304 Q 305 Q 306 Q 307 Q 308 Q 309 Q 340 Q 501 BC 307 Q 502 BC 307 Q 503 BC 307 Q 504 BC 307 Q 505 Q 506 BC 307 Q 507 BC 307 Q 508

D 401 D 402 D 303 D 403 D 304 D 302 D 504 DL 504 MV 5753 D 502 D 503 D 505 D 506 D 507

S 501 L X R · S 502 MS XY LINE GEN · S 503 PHANTOM D E

FET = J 112
D = 1N 4448

3 x 1/3 4025 IC 503
5 x 1/6 4049 IC 504

PAGE 3 (4) · PAGE 3 (3)

+48V P4-9 PHANTOM · P6-10 PHANTOM · P6-47 MIC. CUT · P6-31 LINE SIGN. · P4-11 MIC. SIGN. · P4-1 MASTER SIGN.

STEREO INP. UNIT A 1.912.250 ... 253
PAGE 1 OF 3

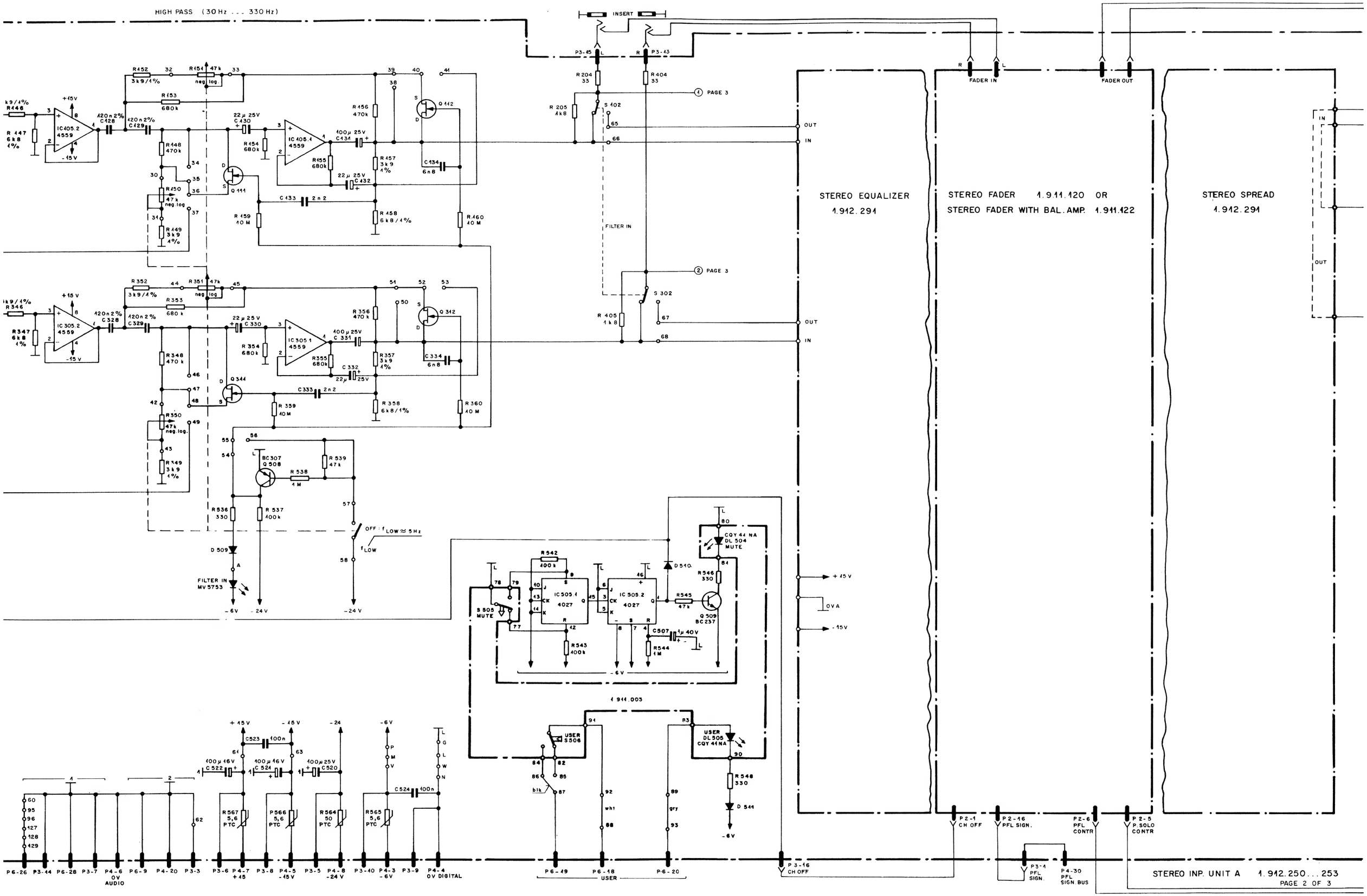
HIGH PASS (30 Hz ... 330 Hz)
INSERT
STEREO EQUALIZER
1.912.291
STEREO FADER 1.911.120 OR
STEREO FADER WITH BAL. AMP. 1.911.122
STEREO SPREAD
1.912.291
FADER IN
FADER OUT
FILTER IN
PAGE 3
OUT
IN
+15V
0VA
-15V
1.911.003
USER
P6-26 P3-44 P6-28 P3-7 P4-6 0V AUDIO P6-9 P4-20 P3-3 P3-6 P4-7 +15 P3-8 P4-5 -15V P3-5 P4-8 -24V P3-10 P4-3 -6V P3-9 P4-4 0V DIGITAL
P6-49 P6-18 USER P6-20
P3-16 CH OFF
P2-1 CH OFF
P2-16 PFL SIGN.
P2-6 PFL CONTR
P2-5 P.SOLO CONTR
P3-1 PFL SIGN.
P4-30 PFL SIGN. BUS
STEREO INP. UNIT A 1.912.250...253
PAGE 2 OF 3

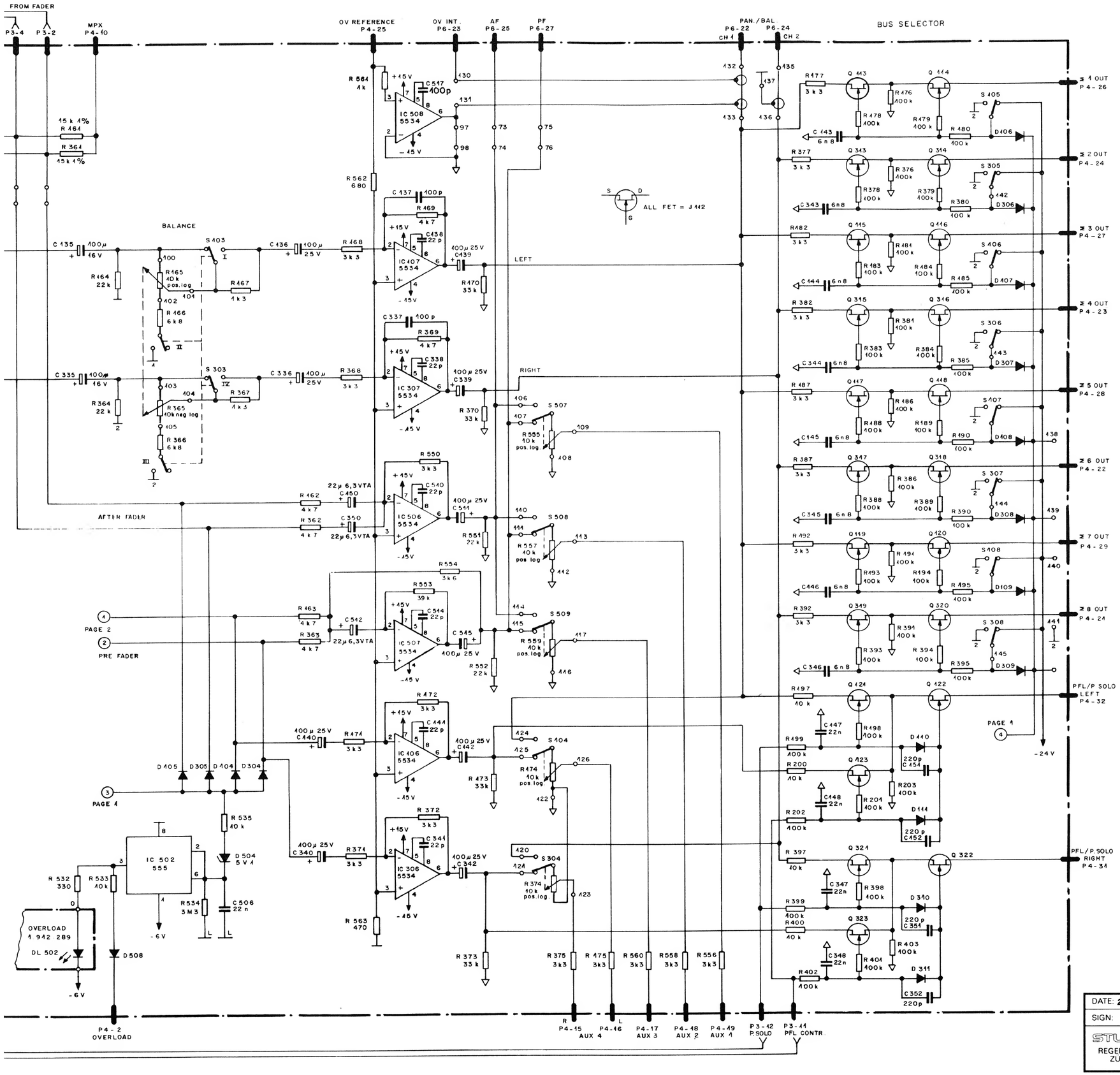

P 6		P 4	P 3	P 2
1	LINE a	1 MASTER SIGN.	1 PFL-SIGN. BUS	1 CH-OFF
2	LINE b } R	2 OVERLOAD	2 FADER OUT L	2 FADER IN L
3	SCREEN	3 -6V	3 OVA R	3 OVA L
4	LINE a } IN 2	4 OVL	4 FADER OUT R	4 FADER IN R
5	LINE b } L	5 -15V	5 -24V	5 P-SOLO CONTR.
6	SCREEN	6 OVA	6 +15V	6 PFL CONTR.
7	P-FILTER OUT } R	7 +15V	7 OVA	7 -6V
8	P-FILTER IN	8 -24V	8 -15V	8 OVL
9	OVA	9 X	9 OVL	9 -15V
10	X	10 MPX	10 -6V	10 OVA
11	MIC. a } R	11 MIC SIGN	11 PFL CONTR	11 +15V
12	MIC. b	12 GEN. a	12 P-SOLO CONTR	12 -24V
13	SCREEN	13 GEN. b	13 FADER IN R	13 FADER OUT R
14	MIC. a } IN 1	14 X	14 OVA L	14 OVA R
15	MIC. b } L	15 AUX 4-R OUT	15 FADER IN L	15 FADER OUT L
16	SCREEN	16 AUX 4-L OUT	16 CH-OFF	16 PFL-SIGN. BUS
17	X	17 AUX 3 OUT		
18	USER	18 AUX 2 OUT		
19	USER	19 AUX 1 OUT		
20	USER	20 OVA		
21	X	21 ≷ 8 OUT		
22	CH 1 PAN/BAL	22 ≷ 6 OUT		
23	OV INT.	23 ≷ 4 OUT		
24	CH 2 PAN/BAL	24 ≷ 2 OUT		
25	AF OUT	25 OV REF		
26	OVA	26 ≷ 1 OUT		
27	PF-OUT	27 ≷ 3 OUT		
28	OVA	28 ≷ 5 OUT		
29	P-FILTER OUT } L	29 ≷ 7 OUT		
30	P-FILTER IN	30 PFL-SIGN. BUS		
31	LINE SIGN.	31 PFL/P-SOLO R		
32	X	32 PFL/P-SOLO L		

ALL FET ARE J 112
ALL DIODES ARE 1N 4448

TDA 1034
5534 OPAMP
LF 351

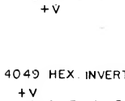

DUAL OPAMP
5532/4559

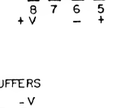

TRIPLE 3-INP. NOR GATE
4025

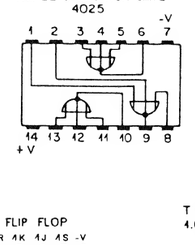

4049 HEX. INVERTING BUFFERS

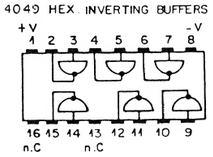

4027 JK FLIP FLOP

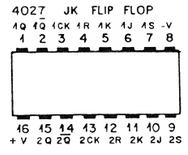

T 101, 201
4.022.449
1:1

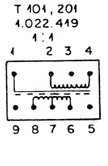

LM 555 TIMER
MC 1455

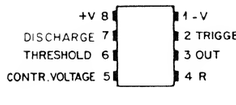

J 112
D S G

BC 237
BC 307
C B E

BOTTOM VIEW

DATE: 27.2.84	1.3.84	25.5.84	4.10.84			PAGE 3 OF 3
SIGN:						
STUDER REGENSDORF ZÜRICH	STEREO INPUT UNIT A					SC 1.912.250... 253

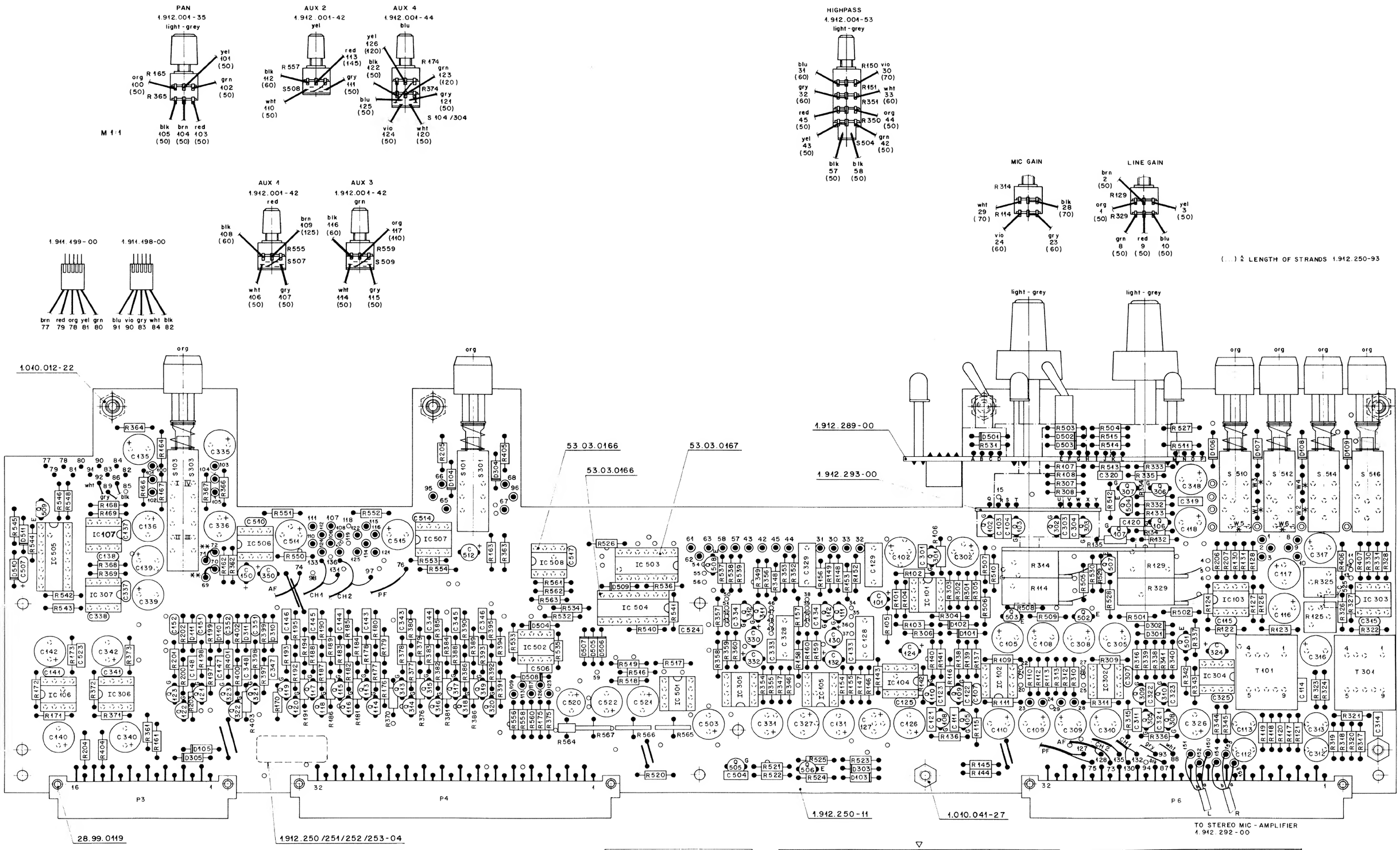

* 4 CH : 1.912.250/251-00
ONLY W3, W4, W5, W6 (1)
ARE REQUIRED

* 8 CH : 1.912.252/253-00
ONLY W1 AND W2 (1)
ARE REQUIRED

** ONLY 1.912.251-00
AND 1.912.253-00

WIRINGDIAGRAM	
STEREO-INPUT 1.912.250/252-00	EQUALIZER 1.912.291-00
61	540
62	541
63	542
68	506
96	500
67	505
66	406
95	400
65	405
69	441
70	446
71	541
72	546

VALID FOR	NR. UNIT	NR. PL	EQUALIZER
4 CH FILTER	1.912.250-00	1.912.250-00	1.912.291-00
4 CH	1.912.251-00	1.912.250-00	—
8 CH FILTER	1.912.252-00	1.912.250-00	1.912.291-00
8 CH	1.912.253-00	1.912.250-00	—

Werkstoff: Norm-Nr.: DIN-Bez.: Abmessung:	Oberfläche: Gute: Beh.:	Änderung: 1.4.85 Si (3) 27.2.84 A.Ho (2)	
Zugehörige Unterlagen: LL, KL	Freimasstoleranz:	Maßstab: 1:1; 2:1	Ausgabe: 26.10.83 A.Ho (1) Datum Gez Gepr Ges Index
Ersatz für:	Ersetzt durch:	Kopie für:	
STUDER REGENSDORF ZÜRICH	Benennung: Stereo Input Unit 4 CH / 8 CH	Nummer: 1.912.250-00	

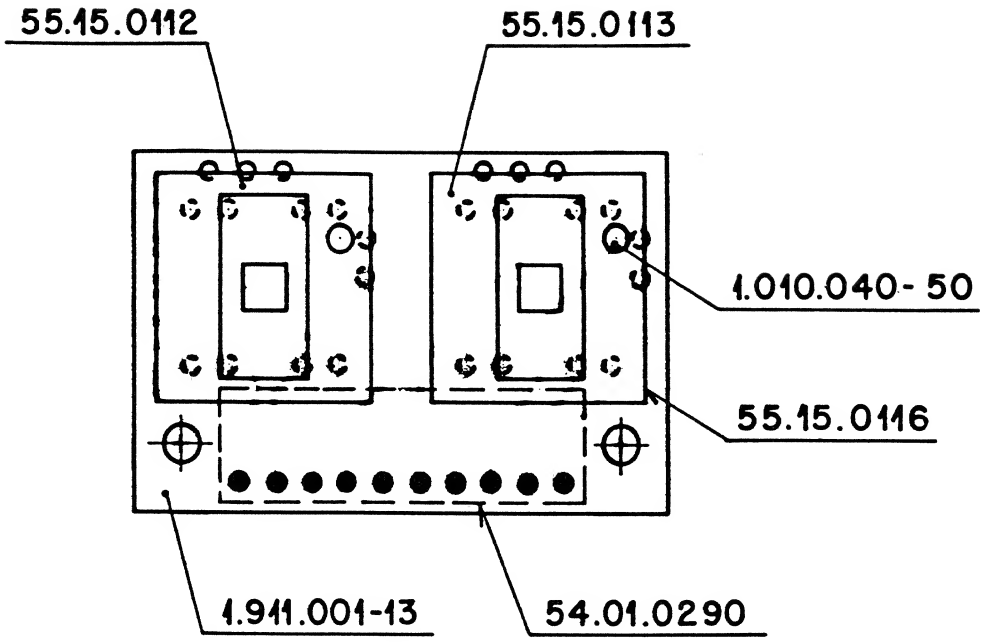

Werkstoff	Norm-Nr.:	Oberfläche	Güte:	Änderung					③
	DIN-Bez.:		Beh.:						②
	Abmessung:								①
Zugehörige Unterlagen:		Freimasstoleranz: ±	Maßstab: 2:1	Ausgabe	19.5.82	Ho			⓪
					Datum	Gez.	Gepr.	Ges.	Index
Ersatz für:		Ersetzt durch:		Kopie für:					
STUDER REGENSDORF ZÜRICH	Benennung: Pushbutton Board N-L			Nummer: 1.911.003-00					

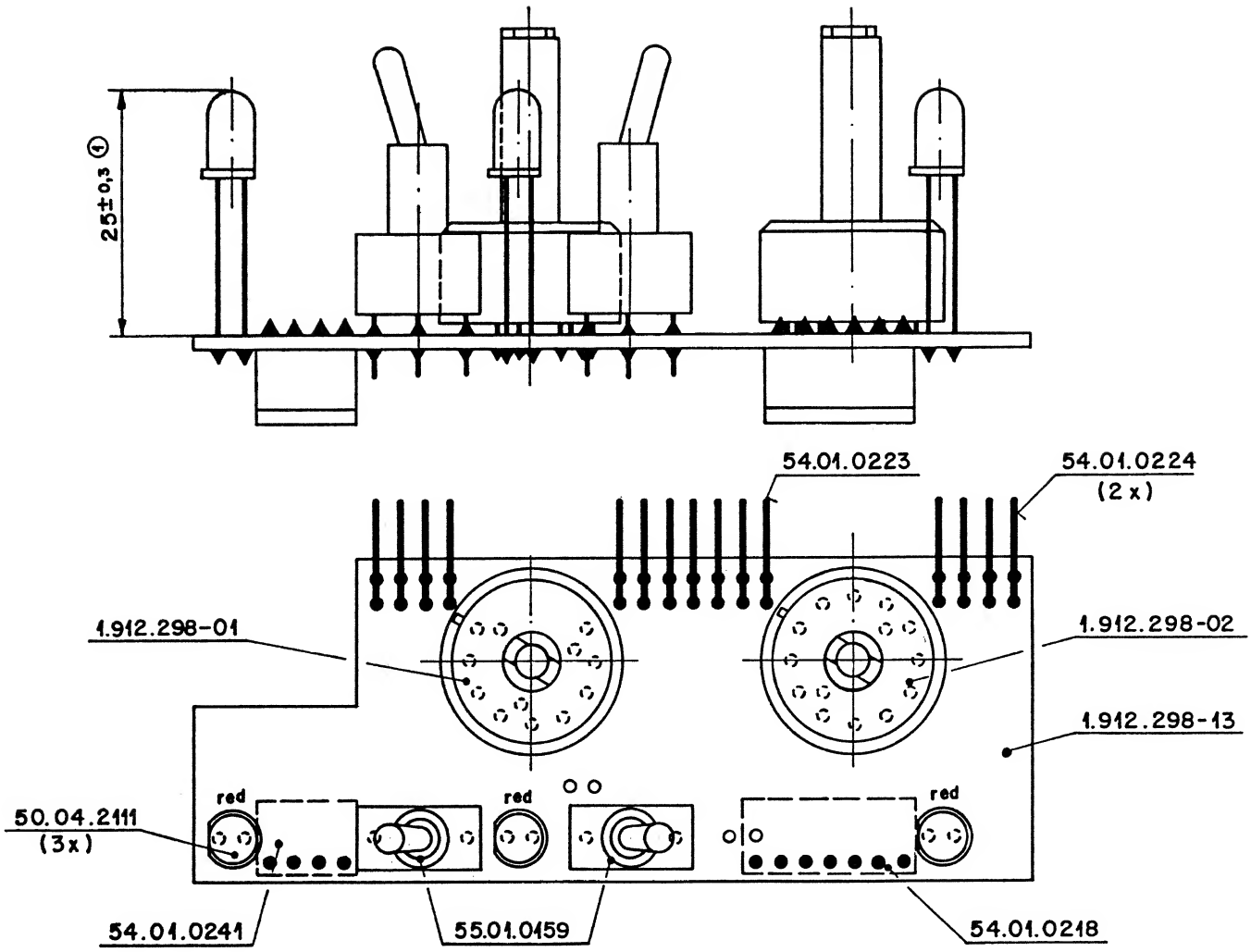

Werkstoff: Norm-Nr.: DIN-Bez.: Abmessung:	Oberfläche: Güte: Beh.:		Änderung					③ ② ①
Zugehörige Unterlagen:	Freimasstoleranz: +	Maßstab: 2 : 1	Ausgabe	25.11.83 Datum	A.Ho Gez.	Gepr.	Ges.	⓪ Index
Ersatz für:	Ersetzt durch:		Kopie für:					
STUDER REGENSDORF ZÜRICH	Benennung: Switch-Board Stereo		Nummer: 1.912.289-00					

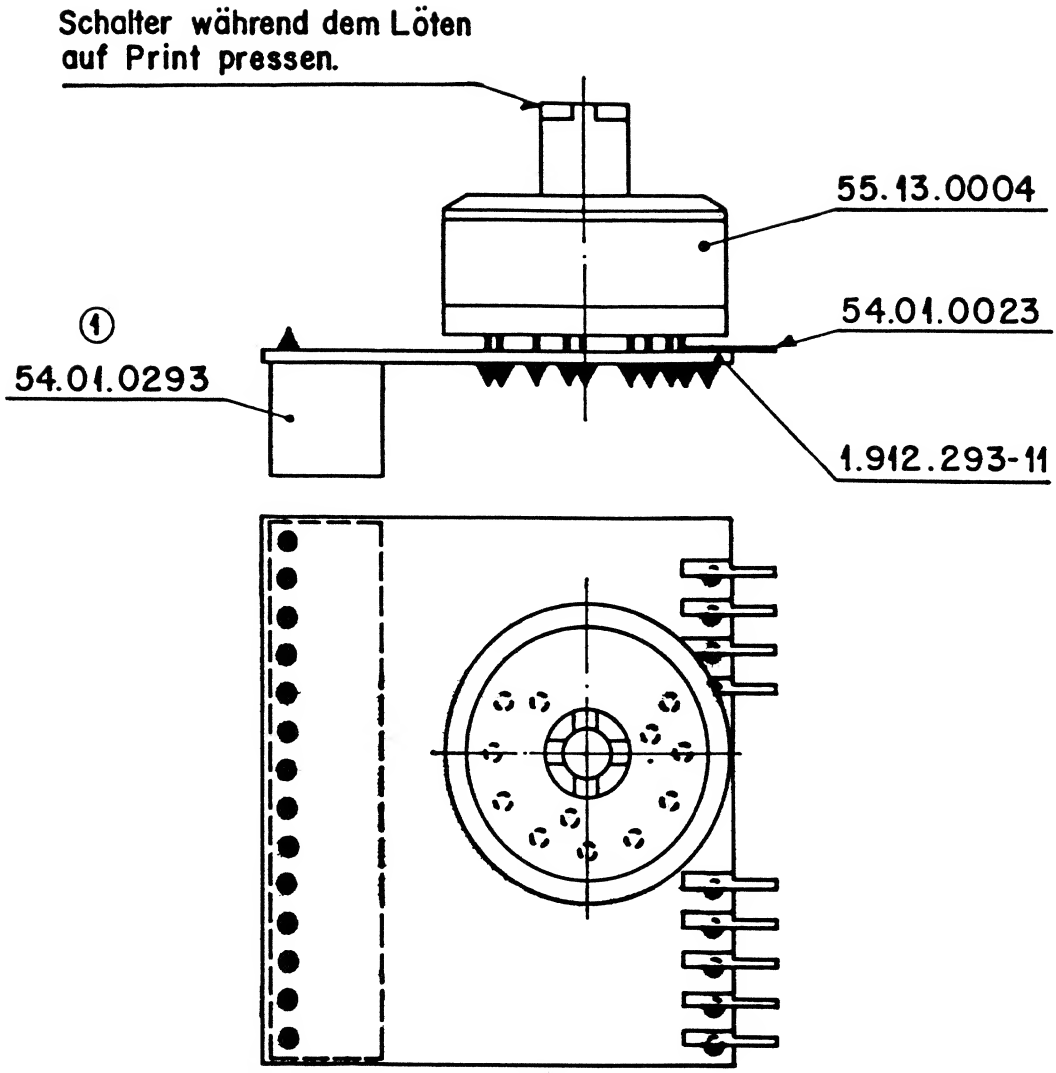

Werkstoff	Norm-Nr.:	Oberfläche	Güte:	Änderung					③
	DIN-Bez.:		Beh.:						②
	Abmessung:				13.1.84	A.Ho			①
Zugehörige Unterlagen:		Freimasstoleranz: ±	Maßstab: 2 : 1	Ausgabe	6.5.83	A.Ho			⓪
					Datum	Gez.	Gepr.	Ges.	Index
Ersatz für:		Ersetzt durch:		Kopie für:					
STUDER REGENSDORF ZÜRICH	Benennung: Switch Interface			Nummer: 1.912.293-00					

IND.	POS.NO.	PART NO.	VALUE	SPECIFICATIONS / EQUIVALENT	MANUF.
	A.....1	1.912.292.00		STEREO-MIC-AMPLIFIER	
	A.....2	1.912.293.00		SWITCH-INTERFACE	
	A.....3	1.912.289.00		SWITCH-BOARD-STEREO	
	A.....4	1.911.003.00		PUSHBUTTON BOARD N-L	
	A.....5	1.911.199.00		CONNECTING CABLE 1	
	A.....6	1.911.198.00		CONNECTING CABLE 2	
	A.....7			EQUALIZER-BOARD 1.912.291.00 option 2	
	C...101	59.30.2220	22 uF	-20% 6.3V TA	
	C...102	59.22.4101	100 uF	-10% 16V EL	
	C...103	59.06.0682	6.8 nF	10% 50V PE	
	C...104	59.06.0682	6.8 nF	10% 50V PE	
	C...105	59.22.4101	100 uF	-20% 16V EL	
	C...106		not used		
	C...107	59.34.2220	22 pF	5% CE	
	C...108	59.22.4101	100 uF	-20% 16V EL	
	C...109	59.22.4101	100 uF	-20% 16V EL	
	C...110	59.22.4101	100 uF	-20% 16V EL	
	C...111	59.06.0682	6.8 nF	10% 50V EL	
	C...112	59.05.1681	680 pF	1% 500V PP	
	C...113	59.05.1681	680 pF	1% 500V PP	
(01)	C...114	59.06.0682	6.8 nF	10% 50V PE	
(01)	C...115	59.34.5391	390 pF	5% CE	
	C...116	59.22.4101	100 uF	-20% 16V EL	
	C...117	59.22.4101	100 uF	-20% 16V EL	
	C...118	59.22.4101	100 uF	-20% 16V EL	
	C...119	59.06.0682	6.8 nF	10% 50V PE	
	C...120	59.06.0682	6.8 nF	10% 50V PE	
	C...121	59.06.0682	6.8 nF	10% 50V PE	
	C...122	59.06.0682	6.8 nF	10% 50V PE	
	C...123	59.06.0682	6.8 nF	10% 50V PE	
	C...124	59.30.2220	22 uF	-20% 6.3V TA	
	C...125	59.34.2220	22 pF	5% CE	
	C...126	59.22.4101	100 uF	-20% 16V EL	
	C...127	59.22.4101	100 uF	-20% 16V EL	
(01)	C...128	59.02.2124	120 nF	5% PC	
(01)	C...129	59.02.2124	120 nF	5% PC	

IND.	POS.NO.	PART NO.	VALUE	SPECIFICATIONS / EQUIVALENT	MANUF.
	C...130	59.30.2220	22 uF	-20% 6.3V TA	
	C...131	59.22.4101	100 uF	-20% 16V EL	
	C...132	59.30.2220	22 uF	-20% 6.3V TA	
	C...133	59.06.0222	2.2 nF	10% 50V PE	
	C...134	59.06.0682	6.8 nF	10% 50V PE	
	C...135	59.22.4101	100 uF	-20% 16V EL	
	C...136	59.22.4101	100 uF	-20% 16V EL	
	C...137	59.34.4101	100 pF	5% CE	
	C...138	59.34.2220	22 pF	5% CE	
	C...139	59.22.4101	100 uF	-20% 16V EL	
	C...140	59.22.4101	100 uF	-20% 16V EL	
	C...141	59.34.2220	22 pF	5% CE	
	C...142	59.22.4101	100 uF	-20% 16V EL	
	C...143	59.06.0682	6.8 nF	10% 50V PE	
	C...144	59.06.0682	6.8 nF	10% 50V PE	
	C...145	59.06.0682	* 6.8 nF	10% 50V PE	
	C...146	59.06.0682	* 6.8 nF	10% 50V PE	
	C...147	59.06.0223	22 nF	10% 50V PE	
	C...148	59.06.0223	22 nF	10% 50V PE	
	C...149		not used		
	C...150	59.30.2220	22 uF	-20% 6.3V TA	
	C...151	59.34.4221	220 pF	5% CE	
	C...152	59.34.4221	220 pF	5% CE	
	C...301	59.06.0682	6.8 nF	10% 50V PE	
	C...302	59.22.4101	100 uF	-10% 16V EL	
	C...303	59.06.0682	6.8 nF	10% 50V PE	
	C...304	59.06.0682	6.8 nF	10% 50V PE	
	C...305	59.22.4101	100 uF	-20% 16V EL	
	C...306		not used		
	C...307	59.34.2220	22 pF	5% CE	
	C...308	59.22.4101	100 uF	-20% 16V EL	
	C...309	59.22.4101	100 uF	-20% 16V EL	
	C...310	59.22.4101	100 uF	-20% 16V EL	
	C...311	59.06.0682	6.8 nF	10% 50V EL	
	C...312	59.05.1681	680 pF	1% 500V PP	
	C...313	59.05.1681	680 pF	1% 500V PP	
(01)	C...314	59.06.0682	6.8 nF	10% 50V PE	

IND.	POS.NO.	PART NO.		VALUE	SPECIFICATIONS / EQUIVALENT			MANUF.
(01)	C...315	59.34.5391		390 pF	5%		CE	
	C...316	59.22.4101		100 uF	-20%	16V	EL	
	C...317	59.22.4101		100 uF	-20%	16V	EL	
(03)	C...318	59.22.3101		100 uF	-20%	10V	EL	
	C...319	59.06.0682		6.8 nF	10%	50V	PE	
	C...320	59.06.0682		6.8 nF	10%	50V	PE	
	C...321	59.06.0682		6.8 nF	10%	50V	PE	
	C...322	59.06.0682		6.8 nF	10%	50V	PE	
	C...323	59.06.0682		6.8 nF	10%	50V	PE	
	C...324	59.30.2220		22 uF	-20%	6.3V	TA	
	C...325	59.34.2220		22 pF	5%		CE	
	C...326	59.22.4101		100 uF	-20%	16V	EL	
	C...327	59.22.4101		100 uF	-20%	16V	EL	
(01)	C...328	59.02.2124		120 nF	5%		PC	
(01)	C...329	59.02.2124		120 nF	5%		PC	
	C...330	59.30.2220		22 uF	-20%	6.3V	TA	
	C...331	59.22.4101		100 uF	-20%	16V	EL	
	C...332	59.30.2220		22 uF	-20%	6.3V	TA	
	C...333	59.06.0222		2.2 nF	10%	50V	PE	
	C...334	59.06.0682		6.8 nF	10%	50V	PE	
	C...335	59.22.4101		100 uF	-20%	16V	EL	
	C...336	59.22.4101		100 uF	-20%	16V	EL	
	C...337	59.34.4101		100 pF	5%		CE	
	C...338	59.34.2220		22 pF	5%		CE	
	C...339	59.22.4101		100 uF	-20%	16V	EL	
	C...340	59.22.4101		100 uF	-20%	16V	EL	
	C...341	59.34.2220		22 pF	5%		CE	
	C...342	59.22.4101		100 uF	-20%	16V	EL	
	C...343	59.06.0682		6.8 nF	10%	50V	PE	
	C...344	59.06.0682		6.8 nF	10%	50V	PE	
	C...345	59.06.0682	*	6.8 nF	10%	50V	PE	
	C...346	59.06.0682	*	6.8 nF	10%	50V	PE	
	C...347	59.06.0223		22 nF	10%	50V	PE	
	C...348	59.06.0223		22 nF	10%	50V	PE	
	C...349			not used				
	C...350	59.30.2220		22 uF	-20%	6.3V	TA	
	C...351	59.34.4221		220 pF	5%		CE	

IND.	POS.NO.	PART NO.		VALUE	SPECIFICATIONS / EQUIVALENT			MANUF.
	C...352	59.34.4221		220 pF	5%		CE	
	C...501			not used				
	C...502			not used				
	C...503	59.22.4101		100 uF	-20%	16V	EL	
	C...504	59.06.0682		6.8 nF	10%	50V	PE	
	C...505			not used				
	C...506	59.06.0223		22 nF	10%	50V	PE	
(03)	C...507	59.26.9109		1 uF		25V	SAL	
	C...508			not used				
	C...509			not used				
	C...510	59.34.2220		22 pF	5%		CE	
	C...511	59.22.4101		100 uF	-10%	16V	EL	
	C...512	59.30.2220		22 uF	-20%	6.3V	TA	
	C...513			not used				
	C...514	59.34.2220		22 pF	5%		CE	
	C...515	59.22.4101		100 uF	-10%	16V	EL	
	C...516			not used				
(04)	C...517	59.34.4101		100 pF	5%		CE	
	C...518			not used				
	C...519			not used				
	C...520	59.22.5101		100 uF	-10%	25V	EL	
	C...521	59.22.4101		100 uF	-10%	16V	EL	
	C...522	59.22.4101		100 uF	-10%	16V	EL	
	C...523	59.06.0104		100 nF		50V	PE	
	C...524	59.06.0104		100 nF		50V	PE	
(01)	C...525	59.32.3103		10 nF			CE	
	D...101	50.04.0125		1N4448				any
	D...102	50.04.0125		1N4448				any
	D...103	50.04.0125		1N4448				any
	D...104	50.04.0125		1N4448				any
	D...105	50.04.0125		1N4448				any
(03)	D...106	50.04.0125	*	1N4448				any
	D...107	50.04.0125		1N4448				any
(03)	D...108	50.04.0125		1N4448				any
	D...109	50.04.0125	*	1N4448				any
	D...110	50.04.0125		1N4448				any

IND.	POS.NO.	PART NO.		VALUE	SPECIFICATIONS / EQUIVALENT		MANUF.
	D...111	50.04.0125		1N4448			any
	D...301	50.04.0125		1N4448			any
	D...302	50.04.0125		1N4448			any
	D...303	50.04.0125		1N4448			any
	D...304	50.04.0125		1N4448			any
	D...305	50.04.0125		1N4448			any
	D...306			1N4448		50040125	any
	D...307			1N4448		50040125	any
	D...308		*	1N4448		50040125	any
	D...309		*	1N4448		50040125	any
	D...310	50.04.0125		1N4448			any
	D...311	50.04.0125		1N4448			any
	D...501	50.04.0125		1N4448			any
	D...502	50.04.0125		1N4448			any
	D...503	50.04.0125		1N4448			any
	D...504	50.04.1112		Z 5.1V	400mW	BZX83C 5.1, BZX55C 5.1, ZPD 5.1	
	D...505	50.04.0125		1N4448			any
	D...506	50.04.0125		1N4448			any
	D...507	50.04.0125		1N4448			any
	D...508	50.04.0125		1N4448			any
	D...509	50.04.0125		1N4448			any
	D...510	50.04.0125		1N4448			any
	D...511	50.04.0125		1N4448			any
	IC..101	50.09.0107		RC4559 N	dual op. amp.		Ti,Sig,Ra
	IC..102	50.05.0244		NE5534AN	single op. amp.	low noise	Ti,Sig,Ra
	IC..103	50.09.0106		NE5532AN	dual op. amp.	low noise	Ti,Sig,Ra
	IC..104	50.05.0243		NE5534 N	single op. amp.		Ti,Sig,Ra
(02)	IC..105	50.09.0107		RC4559 N	dual op. amp.		Ti,Sig,Ra
	IC..106	50.05.0243		NE5534 N	single op. amp.		Ti,Sig,Ra
	IC..107	50.05.0243		NE5534 N	single op. amp.		Ti,Sig,Ra
	IC..302	50.05.0244		NE5534AN	single op. amp.	low noise	Ti,Sig,Ra
	IC..303	50.09.0106		NE5532AN	dual op. amp.	low noise	Ti,Sig,Ra
	IC..304	50.05.0243		NE5534 N	single op. amp.		Ti,Sig,Ra
(02)	IC..305	50.09.0107		RC4559 N	dual op. amp.		Ti,Sig,Ra
	IC..306	50.05.0243		NE5534 N	single op. amp.		Ti,Sig,Ra
	IC..307	50.05.0243		NE5534 N	single op. amp.		Ti,Sig,Ra

IND.	POS.NO.	PART NO.		VALUE	SPECIFICATIONS / EQUIVALENT		MANUF.
	IC..501	50.09.0103		TL 071	single op. amp.		TI
	IC..502	50.05.0158		NE 555	timer		Sig,Mot,NSC
	IC..503	50.07.0012		CD4025	3-input nor-gate	CMOS	Mot,Fc,NSC
	IC..504	50.07.0049		CD4049	hex. inverter	CMOS	Fc,Mot
	IC..505	50.07.0027		CD4027	dual JK-FF	CMOS	Mot,Fc
	IC..506	50.05.0243		NE5534N	single op. amp.		TI,Sig,Ra
	IC..507	50.05.0243		NE5534N	single op. amp.		TI,Sig,Ra
	IC..508	50.05.0243		NE5534N	single op. amp.		TI,Sig,Ra
	P.....3	54.11.2007		2*8 pin	euroconnector		Bu
	P.....4	54.01.0359		2*16pin	euroconnector		Bu
	P.....6	54.01.0359		2*16pin	euroconnector		Bu
	Q...102	50.03.0350		J 112	N-JFET		NS,Mot,Six
	Q...103	50.03.0350		J 112	N-JFET		NS,Mot,Six
	Q...105	50.03.0350		J 112	N-JFET		NS,Mot,Six
	Q...106	50.03.0350		J 112	N-JFET		NS,Mot,Six
	Q...107	50.03.0350		J 112	N-JFET		NS,Mot,Six
	Q...108	50.03.0350		J 112	N-JFET		NS,Mot,Six
	Q...109	50.03.0350		J 112	N-JFET		NS,Mot,Six
	Q...110	50.03.0350		J 112	N-JFET		NS,Mot,Six
	Q...111	50.03.0350		J 112	N-JFET		NS,Mot,Six
	Q...112	50.03.0350		J 112	N-JFET		NS,Mot,Six
	Q...113	50.03.0350		J 112	N-JFET		NS,Mot,Six
	Q...114	50.03.0350		J 112	N-JFET		NS,Mot,Six
	Q...115	50.03.0350		J 112	N-JFET		NS,Mot,Six
	Q...116	50.03.0350		J 112	N-JFET		NS,Mot,Six
	Q...117	50.03.0350	*	J 112	N-JFET		NS,Mot,Six
	Q...118	50.03.0350	*	J 112	N-JFET		NS,Mot,Six
	Q...119	50.03.0350	*	J 112	N-JFET		NS,Mot,Six
	Q...120	50.03.0350	*	J 112	N-JFET		NS,Mot,Six
	Q...121	50.03.0350		J 112	N-JFET		NS,Mot,Six
	Q...122	50.03.0350		J 112	N-JFET		NS,Mot,Six
	Q...123	50.03.0350		J 112	N-JFET		NS,Mot,Six
	Q...301	50.03.0350		J 112	N-JFET		NS,Mot,Six
	Q...302	50.03.0350		J 112	N-JFET		NS,Mot,Six
	Q...303	50.03.0350		J 112	N-JFET		NS,Mot,Six

IND.	POS.NO.	PART NO.		VALUE	SPECIFICATIONS / EQUIVALENT	MANUF.
	Q...305	50.03.0350		J 112	N-JFET	NS,Mot,Six
	Q...306	50.03.0350		J 112	N-JFET	NS,Mot,Six
	Q...307	50.03.0350		J 112	N-JFET	NS,Mot,Six
	Q...308	50.03.0350		J 112	N-JFET	NS,Mot,Six
	Q...309	50.03.0350		J 112	N-JFET	NS,Mot,Six
	Q...310	50.03.0350		J 112	N-JFET	NS,Mot,Six
	Q...311	50.03.0350		J 112	N-JFET	NS,Mot,Six
	Q...312	50.03.0350		J 112	N-JFET	NS,Mot,Six
	Q...313	50.03.0350		J 112	N-JFET	NS,Mot,Six
	Q...314	50.03.0350		J 112	N-JFET	NS,Mot,Six
	Q...315	50.03.0350		J 112	N-JFET	NS,Mot,Six
	Q...316	50.03.0350		J 112	N-JFET	NS,Mot,Six
	Q...317	50.03.0350	*	J 112	N-JFET	NS,Mot,Six
	Q...318	50.03.0350	*	J 112	N-JFET	NS,Mot,Six
	Q...319	50.03.0350	*	J 112	N-JFET	NS,Mot,Six
	Q...320	50.03.0350	*	J 112	N-JFET	NS,Mot,Six
	Q...321	50.03.0350		J 112	N-JFET	NS,Mot,Six
	Q...322	50.03.0350		J 112	N-JFET	NS,Mot,Six
	Q...323	50.03.0350		J 112	N-JFET	NS,Mot,Six
	Q...501	50.03.0515		BC 307	PNP IC>100mA, B>100	any
	Q...502	50.03.0515		BC 307	PNP IC>100mA, B>100	any
	Q...503	50.03.0515		BC 307	PNP IC>100mA, B>100	any
	Q...504	50.03.0515		BC 307	PNP IC>100mA, B>100	any
	Q...505	50.03.0350		J 112	N-JFET	NS,Mot,Six
	Q...506	50.03.0515		BC 307	PNP IC>100mA, B>100	any
	Q...507	50.03.0515		BC 307	PNP IC>100mA, B>100	any
	Q...508	50.03.0515		BC 307	PNP IC>100mA, B>100	any
	Q...509	50.03.0436		BC 237	NPN IC>100mA, B>100	any
	R...101	57.11.3103		10 kOhm	1% 0.25W MF	
	R...102	57.11.3103		10 kOhm	1% 0.25W MF	
	R...103	57.11.4822		8.2 kOhm	5% 0.25W MF	
	R...104	57.11.4332		3.3 kOhm	5% 0.25W MF	
	R...105	57.11.4223		22 kOhm	5% 0.25W MF	
	R...106	57.11.4105		1 MOhm	5% 0.25W MF	
	R...107	57.11.6106		10 MOhm	10% 0.25W MF	
	R...108	57.11.6106		10 MOhm	10% 0.25W MF	

IND.	POS.NO.	PART NO.	VALUE	SPECIFICATIONS / EQUIVALENT	MANUF.
	R...109	57.11.4103	10 kOhm	5% 0.25W MF	
	R...110	57.11.4223	22 kOhm	5% 0.25W MF	
	R...111	57.11.3472	4.7 kOhm	1% 0.25W MF	
	R...112	57.11.4561	560 Ohm	2% 0.25W MF	
	R...113	57.11.3271	270 Ohm	1% 0.25W MF	
	R...114	1.912.001.30	10 kOhm	5% pos.log.variable resistor	St
	R...115	57.11.4223	22 kOhm	5% 0.25W MF	
	R...116	57.11.6106	10 MOhm	10% 0.25W MF	
	R...117	57.11.3152	1.5 kOhm	1% 0.25W MF	
	R...118	57.11.3152	1.5 kOhm	1% 0.25W MF	
	R...119	57.11.3392	3.9 kOhm	1% 0.25W MF	
	R...120	57.11.3392	3.9 kOhm	1% 0.25W MF	
(01)	R...121	57.11.4392	3.9 kOhm	5% 0.25W MF	
(01)	R...122	57.11.4472	4.7 kOhm	5% 0.25W MF	
(01)	R...123	57.11.4153	15 kOhm	5% 0.25W MF	
(01)	R...124	57.11.4331	330 Ohm	5% 0.25W MF	
(01)	R...125	58.01.8502	5 kOhm	10% 0.50W trimming resistor	
(01)	R...126	57.11.4122	1.2 kOhm	5% 0.25W MF	
(01)	R...127	57.11.4222	2.2 kOhm	5% 0.25W MF	
	R...128	57.11.4152	1.5 kOhm	5% 0.25W MF	
	R...129	1.912.001.29	10 kOhm	10% lin. variable resistor	St
	R...130	57.11.4222	2.2 kOhm	5% 0.25W MF	
	R...131	57.11.4152	1.5 kOhm	5% 0.25W MF	
	R...132	57.11.4223	22 kOhm	5% 0.25W MF	
	R...133	57.11.6106	10 MOhm	10% 0.25W MF	
(01)	R...134	57.11.4223	22 kOhm	5% 0.25W MF	
	R...135	57.11.6106	10 MOhm	10% 0.25W MF	
(03)	R...136	57.11.6106	10 MOhm	10% 0.25W MF	
(01)	R...137	57.11.4104	100 kOhm	5% 0.25W MF	
	R...138	57.11.4105	1 MOhm	5% 0.25W MF	
	R...139	57.11.6106	10 MOhm	10% 0.25W MF	
	R...140	57.11.4105	1 MOhm	5% 0.25W MF	
	R...141	57.11.6106	10 MOhm	10% 0.25W MF	
(01)	R...142	57.11.4104	100 kOhm	5% 0.25W MF	
(01)	R...143	57.11.4104	100 kOhm	5% 0.25W MF	
	R...144	57.11.4223	22 kOhm	5% 0.25W MF	
	R...145	57.11.4330	33 Ohm	5% 0.25W MF	

IND.	POS.NO.	PART NO.	VALUE	SPECIFICATIONS / EQUIVALENT	MANUF.
	R...146	57.11.3392	3.9 kOhm 1% 0.25W MF		
	R...147	57.11.3682	6.8 kOhm 1% 0.25W MF		
	R...148	57.11.3474	470 kOhm 1% 0.25W MF		
(01)	R...149	57.11.3392	3.9 kOhm 1% 0.25W MF		
	R...150	1.912.001.53	47 kOhm 5% neg.log.variable resistor		St
	R...151		47 kOhm 5% neg.log.variable resistor, see R150		St
(01)	R...152	57.11.3392	3.9 kOhm 1% 0.25W MF		
	R...153	57.11.4684	680 kOhm 5% 0.25W MF		
	R...154	57.11.4684	680 kOhm 5% 0.25W MF		
	R...155	57.11.4684	680 kOhm 5% 0.25W MF		
	R...156	57.11.3474	470 kOhm 1% 0.25W MF		
	R...157	57.11.3392	3.9 kOhm 1% 0.25W MF		
	R...158	57.11.3682	6.8 kOhm 1% 0.25W MF		
	R...159	57.11.6106	10 MOhm 10% 0.25W MF		
	R...160	57.11.6106	10 MOhm 10% 0.25W MF		
	R...161	57.11.3153	15 kOhm 1% 0.25W MF		
	R...162	57.11.4472	4.7 kOhm 5% 0.25W MF		
	R...163	57.11.4472	4.7 kOhm 5% 0.25W MF		
	R...164	57.11.4223	22 kOhm 5% 0.25W MF		
	R...165	1.912.001.35	10 kOhm 20% pos.log.variable resistor		St
	R...166	57.11.4682	6.8 kOhm 5% 0.25W MF		
	R...167	57.11.3132	1.3 kOhm 2% 0.25W MF		
	R...168	57.11.4332	3.3 kOhm 5% 0.25W MF		
	R...169	57.11.4472	4.7 kOhm 5% 0.25W MF		
	R...170	57.11.4333	33 kOhm 5% 0.25W MF		
	R...171	57.11.4332	3.3 kOhm 5% 0.25W MF		
	R...172	57.11.4332	3.3 kOhm 5% 0.25W MF		
	R...173	57.11.4333	33 kOhm 5% 0.25W MF		
	R...174	1.912.001.44	10 kOhm 20% pos.log.variable resistor		
	R...175	57.11.4332	3.3 kOhm 5% 0.25W MF		
	R...176	57.11.4104	100 kOhm 5% 0.25W MF		
	R...177	57.11.4332	3.3 kOhm 5% 0.25W MF		
	R...178	57.11.4104	100 kOhm 5% 0.25W MF		
	R...179	57.11.4104	100 kOhm 5% 0.25W MF		
	R...180	57.11.4104	100 kOhm 5% 0.25W MF		
	R...181	57.11.4104	100 kOhm 5% 0.25W MF		
	R...182	57.11.4332	3.3 kOhm 5% 0.25W MF		

IND.	POS.NO.	PART NO.	VALUE	SPECIFICATIONS / EQUIVALENT	MANUF.
	R...183	57.11.4104	100 kOhm 5% 0.25W MF		
	R...184	57.11.4104	100 kOhm 5% 0.25W MF		
	R...185	57.11.4104	100 kOhm 5% 0.25W MF		
	R...186	57.11.4104	*100 kOhm 5% 0.25W MF		
	R...187	57.11.4332	*3.3 kOhm 5% 0.25W MF		
	R...188	57.11.4104	*100 kOhm 5% 0.25W MF		
	R...189	57.11.4104	*100 kOhm 5% 0.25W MF		
	R...190	57.11.4104	*100 kOhm 5% 0.25W MF		
	R...191	57.11.4104	*100 kOhm 5% 0.25W MF		
	R...192	57.11.4332	*3.3 kOhm 5% 0.25W MF		
	R...193	57.11.4104	*100 kOhm 5% 0.25W MF		
	R...194	57.11.4104	*100 kOhm 5% 0.25W MF		
	R...195	57.11.4104	*100 kOhm 5% 0.25W MF		
	R...196		not used		
	R...197	57.11.4103	10 kOhm 5% 0.25W MF		
	R...198	57.11.4104	100 kOhm 5% 0.25W MF		
	R...199	57.11.4104	100 kOhm 5% 0.25W MF		
	R...200	57.11.4103	10 kOhm 5% 0.25W MF		
	R...201	57.11.4104	100 kOhm 5% 0.25W MF		
	R...202	57.11.4104	100 kOhm 5% 0.25W MF		
	R...203	57.11.4104	100 kOhm 5% 0.25W MF		
	R...204	57.11.4330	33 Ohm 5% 0.25W MF		
	R...205		1.8 kOhm 5% 0.25W MF	57114182	optional 2
(01)	R...206		not used		
(01)	R...207	57.11.4109	1 Ohm 5% 0.25W MF		
	R...301	57.11.3472	4.7 kOhm 1% 0.25W MF		
	R...302	57.11.3332	3.3 kOhm 1% 0.25W MF		
	R...303	57.11.3472	4.7 kOhm 1% 0.25W MF		
	R...304	57.11.3332	3.3 kOhm 1% 0.25W MF		
	R...305	57.11.4223	22 kOhm 5% 0.25W MF		
	R...306	57.11.6106	10 MOhm 10% 0.25W MF		
	R...307	57.11.6106	10 MOhm 10% 0.25W MF		
	R...308	57.11.6106	10 MOhm 10% 0.25W MF		
	R...309	57.11.4103	10 kOhm 5% 0.25W MF		
	R...310	57.11.4223	22 kOhm 5% 0.25W MF		
	R...311	57.11.3472	4.7 kOhm 1% 0.25W MF		
	R...312	57.11.4561	560 Ohm 2% 0.25W MF		

IND.	POS.NO.	PART NO.	VALUE	SPECIFICATIONS / EQUIVALENT	MANUF.
	R...313	57.11.3271	270 Ohm	1% 0.25W MF	
	R...314		10 kOhm	5% pos.log.variable resistor,see R114	St
	R...315	57.11.4223	22 kOhm	5% 0.25W MF	
	R...316	57.11.6106	10 MOhm	10% 0.25W MF	
	R...317	57.11.3152	1.5 kOhm	1% 0.25W MF	
	R...318	57.11.3152	1.5 kOhm	1% 0.25W MF	
	R...319	57.11.3392	3.9 kOhm	1% 0.25W MF	
	R...320	57.11.3392	3.9 kOhm	1% 0.25W MF	
(01)	R...321	57.11.4392	3.9 kOhm	5% 0.25W MF	
(01)	R...322	57.11.4472	4.7 kOhm	5% 0.25W MF	
(01)	R...323	57.11.4153	15 kOhm	5% 0.25W MF	
(01)	R...324	57.11.4331	330 Ohm	5% 0.25W MF	
(01)	R...325	58.01.8502	5 kOhm	10% 0.50W trimming resistor	
(01)	R...326	57.11.4122	1.2 kOhm	5% 0.25W MF	
(01)	R...327	57.11.4222	2.2 kOhm	5% 0.25W MF	
	R...328	57.11.4152	1.5 kOhm	5% 0.25W MF	
	R...329		10 kOhm	10% lin. variable resistor, see R129	St
	R...330	57.11.4222	2.2 kOhm	5% 0.25W MF	
	R...331	57.11.4152	1.5 kOhm	5% 0.25W MF	
	R...332	57.11.4223	22 kOhm	5% 0.25W MF	
	R...333	57.11.6106	10 MOhm	10% 0.25W MF	
(01)	R...334	57.11.4223	22 kOhm	5% 0.25W MF	
	R...335	57.11.6106	10 MOhm	10% 0.25W MF	
(03)	R...336	57.11.6106	10 MOhm	10% 0.25W MF	
(01)	R...337	57.11.4104	100 kOhm	5% 0.25W MF	
	R...338	57.11.4105	1 MOhm	5% 0.25W MF	
	R...339	57.11.6106	10 MOhm	10% 0.25W MF	
	R...340	57.11.4105	1 MOhm	5% 0.25W MF	
	R...341	57.11.6106	10 MOhm	10% 0.25W MF	
(01)	R...342	57.11.4104	100 kOhm	5% 0.25W MF	
(01)	R...343	57.11.4104	100 kOhm	5% 0.25W MF	
	R...344	57.11.4223	22 kOhm	5% 0.25W MF	
	R...345	57.11.4330	33 Ohm	5% 0.25W MF	
	R...346	57.11.3392	3.9 kOhm	1% 0.25W MF	
	R...347	57.11.3682	6.8 kOhm	1% 0.25W MF	
	R...348	57.11.3474	470 kOhm	1% 0.25W MF	
(01)	R...349	57.11.3392	3.9 kOhm	1% 0.25W MF	

IND.	POS.NO.	PART NO.	VALUE	SPECIFICATIONS / EQUIVALENT	MANUF.
	R...350		47 kOhm	5% neg.log.variable resistor, see R150	St
	R...351		47 kOhm	5% neg.log.variable resistor, see R150	St
(01)	R...352	57.11.3392	3.9 kOhm	1% 0.25W MF	
	R...353	57.11.4684	680 kOhm	5% 0.25W MF	
	R...354	57.11.4684	680 kOhm	5% 0.25W MF	
	R...355	57.11.4684	680 kOhm	5% 0.25W MF	
	R...356	57.11.3474	470 kOhm	1% 0.25W MF	
	R...357	57.11.3392	3.9 kOhm	1% 0.25W MF	
	R...358	57.11.3682	6.8 kOhm	1% 0.25W MF	
	R...359	57.11.6106	10 MOhm	10% 0.25W MF	
	R...360	57.11.6106	10 MOhm	10% 0.25W MF	
	R...361	57.11.3153	15 kOhm	1% 0.25W MF	
	R...362	57.11.4472	4.7 kOhm	5% 0.25W MF	
	R...363	57.11.4472	4.7 kOhm	5% 0.25W MF	
	R...364	57.11.4223	22 kOhm	5% 0.25W MF	
	R...365		10 kOhm	10% neg.log.variable resistor, see R165	St
	R...366	57.11.4682	6.8 kOhm	5% 0.25W MF	
	R...367	57.11.3132	1.3 kOhm	2% 0.25W MF	
	R...368	57.11.4332	3.3 kOhm	5% 0.25W MF	
	R...369	57.11.4472	4.7 kOhm	5% 0.25W MF	
	R...370	57.11.4333	33 kOhm	5% 0.25W MF	
	R...371	57.11.4332	3.3 kOhm	5% 0.25W MF	
	R...372	57.11.4332	3.3 kOhm	5% 0.25W MF	
	R...373	57.11.4333	33 kOhm	5% 0.25W MF	
	R...374		10 kOhm	20% pos.log.variable resistor, see R174	
	R...375	57.11.4332	3.3 kOhm	5% 0.25W MF	
	R...376	57.11.4104	100 kOhm	5% 0.25W MF	
	R...377	57.11.4332	3.3 kOhm	5% 0.25W MF	
	R...378	57.11.4104	100 kOhm	5% 0.25W MF	
	R...379	57.11.4104	100 kOhm	5% 0.25W MF	
	R...380	57.11.4104	100 kOhm	5% 0.25W MF	
	R...381	57.11.4104	100 kOhm	5% 0.25W MF	
	R...382	57.11.4332	3.3 kOhm	5% 0.25W MF	
	R...383	57.11.4104	100 kOhm	5% 0.25W MF	
	R...384	57.11.4104	100 kOhm	5% 0.25W MF	
	R...385	57.11.4104	100 kOhm	5% 0.25W MF	
	R...386	57.11.4104	*100 kOhm	5% 0.25W MF	

IND.	POS.NO.	PART NO.	VALUE	SPECIFICATIONS / EQUIVALENT	MANUF.
	R...387	57.11.4332	*3.3 kOhm	5% 0.25W MF	
	R...388	57.11.4104	*100 kOhm	5% 0.25W MF	
	R...389	57.11.4104	*100 kOhm	5% 0.25W MF	
	R...390	57.11.4104	*100 kOhm	5% 0.25W MF	
	R...391	57.11.4104	*100 kOhm	5% 0.25W MF	
	R...392	57.11.4332	*3.3 kOhm	5% 0.25W MF	
	R...393	57.11.4104	*100 kOhm	5% 0.25W MF	
	R...394	57.11.4104	*100 kOhm	5% 0.25W MF	
	R...395	57.11.4104	*100 kOhm	5% 0.25W MF	
	R...396		not used		
	R...397	57.11.4103	10 kOhm	5% 0.25W MF	
	R...398	57.11.4104	100 kOhm	5% 0.25W MF	
	R...399	57.11.4104	100 kOhm	5% 0.25W MF	
	R...400	57.11.4103	10 kOhm	5% 0.25W MF	
	R...401	57.11.4104	100 kOhm	5% 0.25W MF	
	R...402	57.11.4104	100 kOhm	5% 0.25W MF	
	R...403	57.11.4104	100 kOhm	5% 0.25W MF	
	R...404	57.11.4330	33 Ohm	5% 0.25W MF	
	R...405		1.8 kOhm	5% 0.25W MF	57114182 option ?
(01)	R...406		not used		
(01)	R...407	57.11.4109	1 Ohm	5% 0.25W MF	
	R...501	57.11.4104	100 kOhm	5% 0.25W MF	
	R...502	57.11.4474	470 kOhm	5% 0.25W MF	
	R...503	57.11.4105	1 MOhm	5% 0.25W MF	
	R...504	57.11.4105	1 MOhm	5% 0.25W MF	
	R...505	57.11.4104	100 kOhm	5% 0.25W MF	
	R...506	57.11.4474	470 kOhm	5% 0.25W MF	
	R...507	57.11.4105	1 MOhm	5% 0.25W MF	
	R...508	57.11.4104	100 kOhm	5% 0.25W MF	
	R...509	57.11.4474	470 kOhm	5% 0.25W MF	
	R...510	57.11.4105	1 MOhm	5% 0.25W MF	
	R...511	57.11.4104	100 kOhm	5% 0.25W MF	
	R...512	57.11.4474	470 kOhm	5% 0.25W MF	
	R...513	57.11.4105	1 MOhm	5% 0.25W MF	
	R...514	57.11.4104	100 kOhm	5% 0.25W MF	
	R...515	57.11.4104	100 kOhm	5% 0.25W MF	
	R...516	57.11.3472	4.7 kOhm	1% 0.25W MF	

IND.	POS.NO.	PART NO.	VALUE	SPECIFICATIONS / EQUIVALENT	MANUF.
	R...517	57.11.4154	150 kOhm	2% 0.25W MF	
	R...518	57.11.3472	4.7 kOhm	1% 0.25W MF	
	R...519	57.11.4154	150 kOhm	2% 0.25W MF	
	R...520	57.11.4223	22 kOhm	5% 0.25W MF	
	R...521	57.11.4103	10 kOhm	5% 0.25W MF	
	R...522	57.11.6106	10 MOhm	10% 0.25W MF	
	R...523	57.11.4104	100 kOhm	5% 0.25W MF	
	R...524	57.11.4474	470 kOhm	5% 0.25W MF	
	R...525	57.11.4105	1 MOhm	5% 0.25W MF	
(01)	R...526	57.11.4105	1 MOhm	5% 0.25W MF	
	R...527	57.11.4103	10 kOhm	5% 0.25W MF	
	R...528	57.11.4104	100 kOhm	5% 0.25W MF	
	R...529	57.11.4105	1 MOhm	5% 0.25W MF	
	R...530	57.11.4104	100 kOhm	5% 0.25W MF	
	R...531	57.11.4331	330 Ohm	5% 0.25W MF	
	R...532	57.11.4331	330 Ohm	5% 0.25W MF	
	R...533	57.11.4103	10 kOhm	5% 0.25W MF	
	R...534	57.11.4335	3.3 MOhm	5% 0.25W MF	
	R...535	57.11.4103	10 kOhm	5% 0.25W MF	
	R...536	57.11.4331	330 Ohm	5% 0.25W MF	
	R...537	57.11.4104	100 kOhm	5% 0.25W MF	
	R...538	57.11.4105	1 MOhm	5% 0.25W MF	
	R...539	57.11.4104	100 kOhm	5% 0.25W MF	
	R...540	57.11.4104	100 kOhm	5% 0.25W MF	
	R...541	57.11.4104	100 kOhm	5% 0.25W MF	
	R...542	57.11.4104	100 kOhm	5% 0.25W MF	
	R...543	57.11.4104	100 kOhm	5% 0.25W MF	
	R...544	57.11.4105	1 MOhm	5% 0.25W MF	
	R...545	57.11.4473	47 kOhm	5% 0.25W MF	
	R...546	57.11.4331	330 Ohm	5% 0.25W MF	
	R...547		not used		
	R...548	57.11.4331	330 Ohm	5% 0.25W MF	
	R...549		not used		
	R...550	57.11.4332	3.3 kOhm	5% 0.25W MF	
	R...551	57.11.4223	22 kOhm	5% 0.25W MF	
	R...552	57.11.4223	22 kOhm	5% 0.25W MF	
	R...553	57.11.4393	39 kOhm	5% 0.25W MF	

IND.	POS.NO.	PART NO.	VALUE		SPECIFICATIONS / EQUIVALENT			MANUF.
	R...554	57.11.3362	3.6 kOhm	5%	0.25W MF			
	R...555	1.912.001.42	10 kOhm	20%	pos.log.variable resistor			St
	R...556	57.11.4332	3.3 kOhm	5%	0.25W MF			
	R...557	1.912.001.42	10 kOhm	20%	pos.log.variable resistor			St
	R...558	57.11.4332	3.3 kOhm	5%	0.25W MF			
	R...559	1.912.001.42	10 kOhm	20%	pos.log.variable resistor			St
	R...560	57.11.4332	3.3 kOhm	5%	0.25W MF			
	R...561	57.11.4102	1 kOhm	5%	0.25W MF			
(01)	R...562	57.11.4681	680 Ohm	5%	0.25W MF			
	R...563	57.11.4471	470 Ohm	5%	0.25W MF			
	R...564	57.99.0206	50 Ohm		PTC	Philips Nr.2322 660 91008		
	R...565	57.99.0209	5.6 Ohm		PTC	Philips Nr.2322 662 91005		
	R...566	57.99.0209	5.6 Ohm		PTC	Philips Nr.2322 662 91005		
	R...567	57.99.0209	5.6 Ohm		PTC	Philips Nr.2322 662 91005		
	R...568							
	R...569							
	S...101		2*U	3u gold		55150003	option2	ITT
	S...102		not used					
	S...103	55.15.0004	4*U	3u gold	button: 55030303		red	ITT
	S...104		2*U	combined with variable resistor R 174				St
	S...105	55.15.0002	2*U		button: 55030303		red	ITT
	S...106	55.15.0002	2*U		button: 55030303		red	ITT
	S...107	55.15.0002	* 2*U		button: 55030303		red	ITT
	S...108	55.15.0002	* 2*U		button: 55030303		red	ITT
	S...301		2*U	3u gold	see S101			
	S...302		not used					
	S...303		4*U	3u gold	see S103			
	S...304		2*U	combined with variable resistor R 174				St
	S...305		2*U			55150012	option1	ITT
	S...306		2*U			55150012	option1	ITT
	S...307		2*U			55150012	option1	ITT
	S...308		2*U			55150012	option1	ITT
	S...501		1*U	toggle-switch		55010159	dialight,CK	
	S...502		2*4	rotary-switch		55130003		St
	S...503		1*U	toggle-switch		55010159	dialight,CK	
	S...504		1*U	combined with variable resistor R 150				St

IND.	POS.NO.	PART NO.	VALUE	SPECIFICATIONS / EQUIVALENT	MANUF.
	S...505		1*U	see 1.911.001.00	
	S...506		1*U	see 1.911.001.00	
	S...507		1*U	combined with variable resistor R 555	St
	S...508		1*U	combined with variable resistor R 557	St
	S...509		1*U	combined with variable resistor R 559	St
	T...101	1.022.451.00		input trafo 1:0.62	St
	T...301	1.022.451.00		input trafo 1:0.62	St

==========
* ONLY 8-CHANNEL
==========

(01) 29.06.83 quality improvement
(02) 15.09.83 improvement of low frequency noise
(03) 27.02.84
(04) 04.10.84 suppression of high frequency

optional 1: 8-switches for 8-master-select

optional 2: with equalizer pcb

CE=Ceramic, CF=Carbon Film, EL=Electrolytic, MF=Metal Film,
PE=Polyester, PP=Polypropylen, PS=Polystyrol

MANUFACTURER: Bu=Burndy, Ex=Exar, Fc=Fairchild, GI=General Instrument
HP=Hewlett Packard, ITT=Intermetall, Mot=Motorola,
NS=National Semiconductors, Ph=Philips, Ra=Raytheon,
Sig=Signetics, Six=Siliconix, St=Studer,
TI=Texas Instrument, CK=C&K

ORIG 83/03/23 (01) 83/06/29 (02) 83/09/15 (03) 84/02/27 (04) 84/10/04

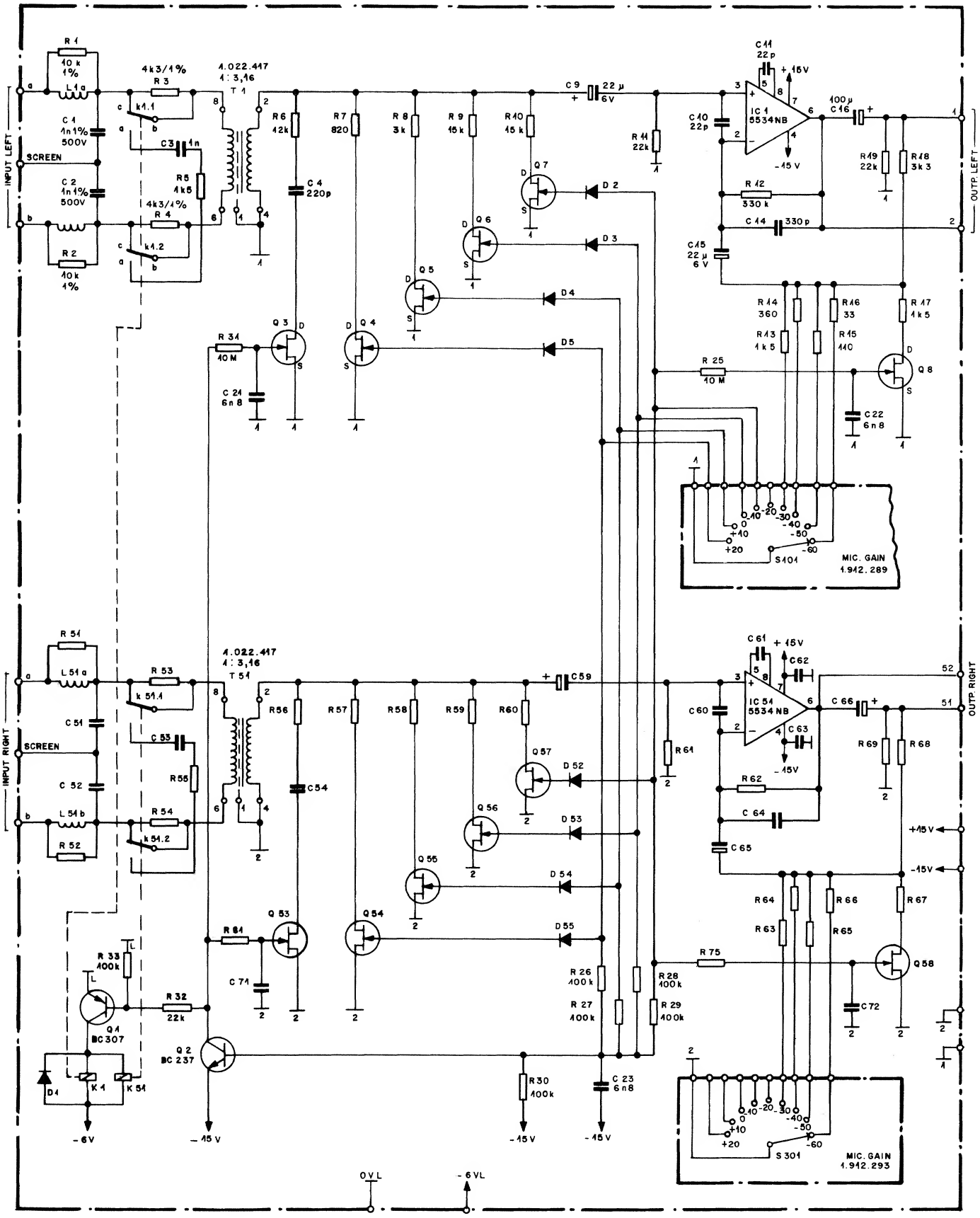

ALL D = 1N 4448

ALL FET = J112

POS. NR.: 1 . . . 49 LEFT
51 . . . 99 RIGHT

DATE:	26.10.83					
SIGN:						
STUDER REGENSDORF ZÜRICH	STEREO MIC. AMPLIFIER					SC 1.942.292

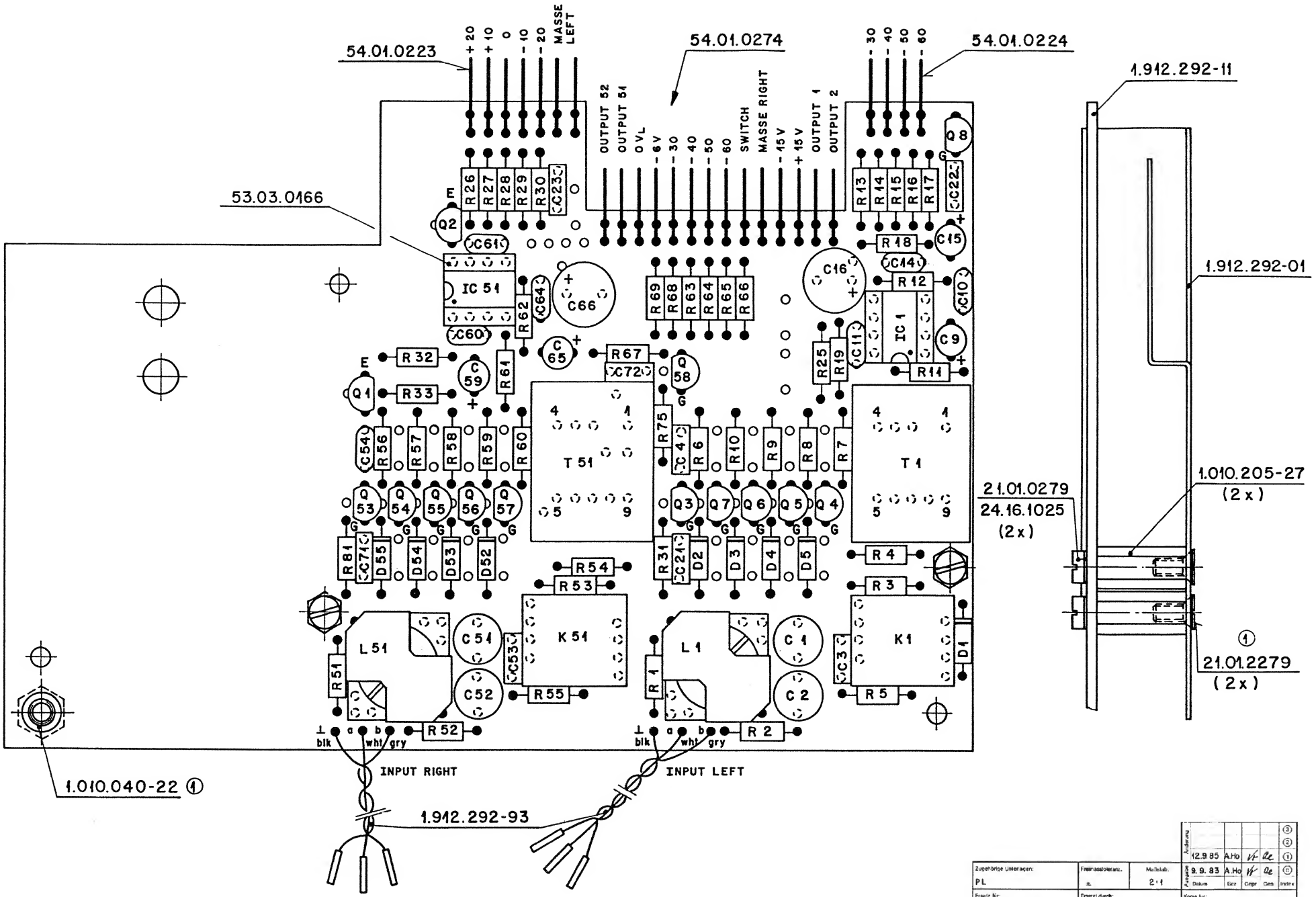

Zugehörige Unterlagen: PL	Freimassstoleranz: ±	Maßstab: 2:1	Änderung					③ ② ①
			Ausgabe	12.9.85	A.Ho			①
				9. 9. 83	A.Ho			⓪
Ersatz für:	Ersetzt durch:		Kopie für:	Datum	Gez.	Gepr.	Gen.	Index
STUDER REGENSDORF ZÜRICH	Benennung: Stereo Mic Amplifier			Nummer: 1.912.292-00				

IND.	POS.NO.	PART NO.	VALUE	SPECIFICATIONS / EQUIVALENT	MANUF.
	C.....1	59.05.1102	1 nF	1% 500V PP	
	C.....2	59.05.1102	1 nF	1% 500V PP	
	C.....3	59.06.0102	1 nF	10% 50V PE	
	C.....4	59.34.4221	220 pF	5% CE	
	C.....5		not used		
	C.....6		not used		
	C.....7		not used		
	C.....8		not used		
	C.....9	59.30.2220	22 uF	-20% 6.3V TA	
	C.....10	59.34.2220	22 pF	5% CE	
	C.....11	59.34.2220	22 pF	5% CE	
	C.....14	59.34.4331	330 pF	5% CE	
	C.....15	59.30.2220	22 uF	-20% 6.3V TA	
(01)	C.....16	59.22.3101	100 uF	-20% 10V EL	
	C.....17		not used		
	C.....18		not used		
	C.....19		not used		
	C.....20		not used		
	C.....21	59.06.0682	6.8 nF	10% 50V PE	
	C.....22	59.06.0682	6.8 nF	10% 50V PE	
	C.....23	59.06.0682	6.8 nF	10% 50V PE	
	C.....24		not used		
	C.....25		not used		
	C.....51	59.05.1102	1 nF	1% 500V PP	
	C.....52	59.05.1102	1 nF	1% 500V PP	
	C.....53	59.06.0102	1 nF	10% 50V PE	
	C.....54	59.34.4221	220 pF	5% CE	
	C.....55		not used		
	C.....56		not used		
	C.....57		not used		
	C.....58		not used		
	C.....59	59.30.2220	22 uF	-20% 6.3V TA	
	C.....60	59.34.2220	22 pF	5% CE	
	C.....61	59.34.2220	22 pF	5% CE	
	C.....62		not used		
	C.....63		not used		
	C.....64	59.34.4331	330 pF	5% CE	
	C.....65	59.30.2220	22 uF	-20% 6.3V TA	
	C.....66	59.22.4101	100 uF	-20% 16V EL	
	C.....67		not used		
	C.....68		not used		
	C.....69		not used		
	C.....70		not used		
	C.....71	59.06.0682	6.8 nF	10% 50V PE	
	C.....72	59.06.0682	6.8 nF	10% 50V PE	
	D.....1	50.04.0125	1N4448		any
	D.....2	50.04.0125	1N4448		any
	D.....3	50.04.0125	1N4448		any
	D.....4	50.04.0125	1N4448		any
	D.....5	50.04.0125	1N4448		any
	D.....52	50.04.0125	1N4448		any
	D.....53	50.04.0125	1N4448		any
	D.....54	50.04.0125	1N4448		any
	D.....55	50.04.0125	1N4448		any
	IC....1	50.05.0244	NE5534AN	single op. amp. low noise	Ti,Sig,Ra
	IC....51	50.05.0244	NE5534AN	single op. amp. low noise	Ti,Sig,Ra
	K.....1	56.04.0170	5 V	relais	
	K.....51	56.04.0170	5 V	relais	
	L.....1	1.022.207.00		HF-sym. coil	
	L.....51	1.022.207.00		HF-sym. coil	
	Q.....1	50.03.0515	BC 307	PNP IC>100mA, B>100	any
	Q.....2	50.03.0436	BC 237	NPN IC>100nA, B>100	any
	Q.....3	50.03.0350	J 112	N-JFET	NS,Mot,Six
	Q.....4	50.03.0350	J 112	N-JFET	NS,Mot,Six
	Q.....5	50.03.0350	J 112	N-JFET	NS,Mot,Six
	Q.....6	50.03.0350	J 112	N-JFET	NS,Mot,Six
	Q.....7	50.03.0350	J 112	N-JFET	NS,Mot,Six
	Q.....8	50.03.0350	J 112	N-JFET	NS,Mot,Six
	Q....53	50.03.0350	J 112	N-JFET	NS,Mot,Six

IND.	POS.NO.	PART NO.	VALUE	SPECIFICATIONS / EQUIVALENT	MANUF.
	Q....54	50.03.0350	J 112	N-JFET	NS,Mot,Six
	Q....55	50.03.0350	J 112	N-JFET	NS,Mot,Six
	Q....56	50.03.0350	J 112	N-JFET	NS,Mot,Six
	Q....57	50.03.0350	J 112	N-JFET	NS,Mot,Six
	Q....58	50.03.0350	J 112	N-JFET	NS,Mot,Six
	R.....1	57.11.3103	10 kOhm	1% 0.25W MF	
	R.....2	57.11.3103	10 kOhm	1% 0.25W MF	
	R.....3	57.11.3432	4.3 kOhm	1% 0.25W MF	
	R.....4	57.11.3432	4.3 kOhm	1% 0.25W MF	
	R.....5	57.11.4152	1.5 kOhm	5% 0.25W MF	
	R.....6	57.11.4123	12 kOhm	5% 0.25W MF	
	R.....7	57.11.4821	820 Ohm	2% 0.25W MF	
	R.....8	57.11.3302	3 kOhm	2% 0.25W MF	
	R.....9	57.11.4153	15 kOhm	2% 0.25W MF	
	R....10	57.11.4153	15 kOhm	2% 0.25W MF	
	R....11	57.11.4223	22 kOhm	5% 0.25W MF	
	R....12	57.11.4334	330 kOhm	5% 0.25W MF	
	R....13	57.11.4152	1.5 kOhm	2% 0.25W MF	
	R....14	57.11.3361	360 Ohm	2% 0.25W MF	
	R....15	57.11.3111	110 Ohm	2% 0.25W MF	
	R....16	57.11.4330	33 Ohm	2% 0.25W MF	
	R....17	57.11.4152	1.5 kOhm	2% 0.25W MF	
	R....18	57.11.3332	3.3 kOhm	2% 0.25W MF	
	R....19	57.11.4223	22 kOhm	5% 0.25W MF	
	R....21		not used		
	R....22		not used		
	R....23		not used		
	R....24		not used		
	R....25	57.11.6106	10 MOhm	10% 0.25W MF	
	R....26	57.11.4104	100 kOhm	5% 0.25W MF	
	R....27	57.11.4104	100 kOhm	5% 0.25W MF	
	R....28	57.11.4104	100 kOhm	5% 0.25W MF	
	R....29	57.11.4104	100 kOhm	5% 0.25W MF	
	R....30	57.11.4104	100 kOhm	5% 0.25W MF	
	R....31	57.11.6106	10 MOhm	10% 0.25W MF	
	R....32	57.11.4223	22 kOhm	5% 0.25W MF	eventuell kleiner
	R....33	57.11.4104	100 kOhm	5% 0.25W MF	
	R....51	57.11.3103	10 kOhm	1% 0.25W MF	
	R....52	57.11.3103	10 kOhm	1% 0.25W MF	
	R....53	57.11.3432	4.3 kOhm	1% 0.25W MF	
	R....54	57.11.3432	4.3 kOhm	1% 0.25W MF	
	R....55	57.11.4152	1.5 kOhm	5% 0.25W MF	
	R....56	57.11.4123	12 kOhm	5% 0.25W MF	
	R....57	57.11.4821	820 Ohm	2% 0.25W MF	
	R....58	57.11.3302	3 kOhm	2% 0.25W MF	
	R....59	57.11.4153	15 kOhm	2% 0.25W MF	
	R....60	57.11.4153	15 kOhm	2% 0.25W MF	
	R....61	57.11.4223	22 kOhm	5% 0.25W MF	
	R....62	57.11.4334	330 kOhm	5% 0.25W MF	
	R....63	57.11.4152	1.5 kOhm	2% 0.25W MF	
	R....64	57.11.3361	360 Ohm	2% 0.25W MF	
	R....65	57.11.3111	110 Ohm	2% 0.25W MF	
	R....66	57.11.4330	33 Ohm	2% 0.25W MF	
	R....67	57.11.4152	1.5 kOhm	2% 0.25W MF	
	R....68	57.11.3332	3.3 kOhm	2% 0.25W MF	
	R....69	57.11.4223	22 kOhm	5% 0.25W MF	
	R....71		not used		
	R....72		not used		
	R....73		not used		
	R....74		not used		
	R....75	57.11.6106	10 MOhm	10% 0.25W MF	
	R....81	57.11.6106	10 MOhm	10% 0.25W MF	
	S.....1		1*U	combined with K1	
	S.....2		2*U	combined with K1	
	S....51		1*U	combined with K1	
	S....52		2*U	combined with K1	
	T.....1	1.022.417.00		input trafo 1:3.1	
	T....51	1.022.417.00		input trafo 1:3.1	
	XIC....	53.03.0166		IC-socket	

CE=Ceramic, CF=Carbon Film, EL=Electrolytic, MF=Metal Film,
PE=Polyester, PP=Polypropylen, PS=Polystyrol

MANUFACTURER: Bu=Burndy, Ex=Exar, Fc=Fairchild, GI=General Instrument
HP=Hewlett Packard, ITT=Intermetall, Mot=Motorola,
NS=National Semiconductors, Ph=Philips, Ra=Raytheon,
Sig=Signetics, Six=Siliconix, St=Studer,
TI=Texas Instrument

ORIG 83/03/29 (1) 84/01/17

STUDER 83/03/29 AE MICROPHONE-AMPLIFIER-STEREO 1.912.292.00

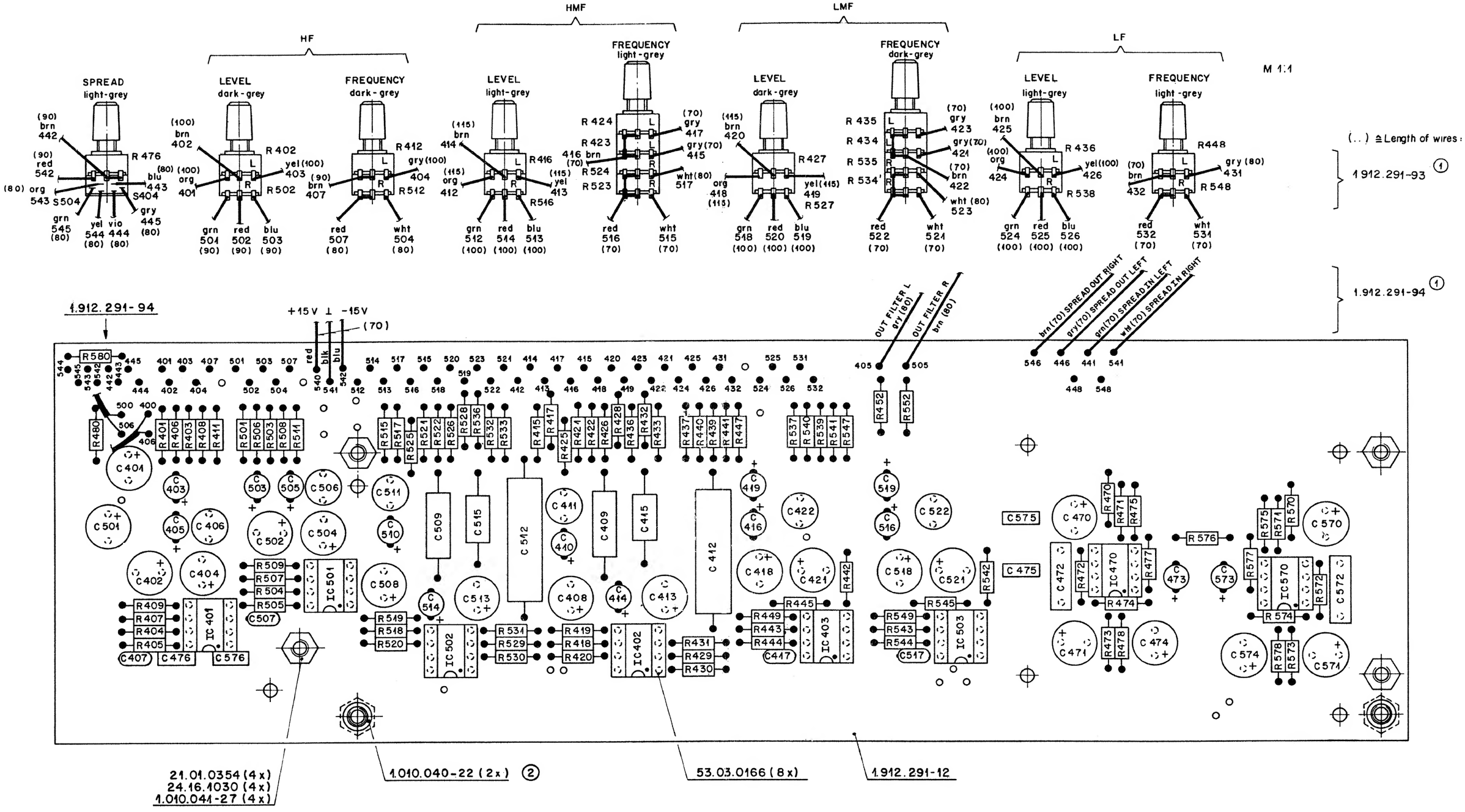

Werkstoff: Norm-Nr.: DIN-Bez.: Abmessung:	Oberfläche: Güte: Beh.:		Änderung: ③ ② 12.9.85 A.Ho ① 22.5.84 STJ
Zugehörige Unterlagen: PL	Freimasstoleranz:	Maßstab: 1:1; 2:1	Ausgabe: ⓪ 8.9.83 A.Ho (Datum / Gez. / Gepr. / Ges. / Index)
Ersatz für:	Ersetzt durch:		Kopie für:
STUDER REGENSDORF ZÜRICH	Benennung: Equalizer Board		Nummer: 1.912.291-00